ALEXANDER ROAD HIGH SCHOOL

JUNE 2018 | 2 HOUR

PHYSICAL SCIENCES PAPER 1

CO, MH | TOTAL = 100

GRADE 10

Instructions

- The question paper consists of 7 questions.
- Answer all the questions.
- Answer section A on the answer sheet provided AND section B on folio sheets.
- Rule off after each question in Section B.
- A non-programmable calculator may be used.
- Number the answers correctly according to the numbering system.
- Round off to two (2) decimal places where necessary.
- Formulas have been included at the end of the question paper

---

SECTION A

- Answer on the answer sheet -

QUESTION 1: Multiple choice

Four possible options are provided as answers to the following questions. Each question has only 1 correct answer. Choose the correct answer and write the letter (A – D) next to the relevant question number (1.1 – 1.10) on the answer sheet.

1.1 Which ONE of the combinations below concerning the pitch and loudness of sound is CORRECT?

The pitch and loudness of sound depend on:

	PITCH	LOUDNESS
A	Frequency	Amplitude of vibration
B	Frequency	Speed of vibration
C	Amplitude of vibration	Frequency
D	Speed of vibration	Frequency

1.2 Consider the following statements concerning ultraviolet radiation:

(i) It cannot be reflected.

(ii) It has a longer wavelength than gamma rays.

(iii) It is radiated from the sun and may be harmful to humans.

Which ONE of the following combinations is CORRECT?

A (ii) and (iii) only

B (i) and (ii) only

C (i) and (iii) only

D (i), (ii) and (iii)

1.3 A rod acquires a negative charge after it has been rubbed with wool.

Which ONE of the following best explains why this happens?

A Positive charges are transferred from the rod to the wool.

B Negative charges are transferred from the rod to the wool.

C Positive charges are transferred from the wool to the rod.

D Negative charges are transferred from the wool to the rod.

1.4 The diagram below represents the magnetic field around a bar magnet.

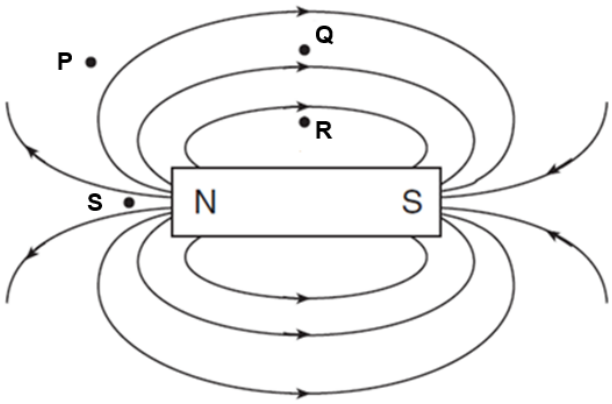

At which point is the magnitude of the magnetic field of the bar magnet the greatest?

A P

B Q

C R

D S

1.5 For which ONE of the quantities below is the CORRECT unit of measurement given?

	QUANTITY	UNIT
A	Current	$A \cdot s^{-1}$
B	Energy	kW
C	Potential difference	V
D	Resistance	$V \cdot s$

1.6 Which ONE of the following shows the different types of electromagnetic radiation in order of decreasing frequency?

A X-rays; ultraviolet rays; infrared rays; visible light

B Infrared rays; X-rays; visible light; ultraviolet rays

C Infrared rays; visible light; ultraviolet rays; X-rays

D X-rays; ultraviolet rays; visible light; infrared rays

1.7 Materials that are strongly attracted by magnets and easily magnetised are …

A magnetic storms.

B magnetospheres.

C ferromagnetic.

D magnets.

1.8 If the air is pumped out off a bell glass, a ringing (non-vibrating) cell phone inside can be **seen** but not **heard**. From this can be derived that …

A sound waves can propagate through a vacuum, but not light waves.

B both sound and light waves can propagate through a vacuum.

C neither sound nor light waves can propagate through a vacuum.

D light waves can propagate through a vacuum, but not sound waves.

1.9 Which one of the following statements regarding magnetic field lines is TRUE?

A Magnetic field lines are always parallel to each other

B The arrows drawn on the magnetic field lines indicate the direction of the magnetic field

C Magnetic field lines are drawn closer to each other where the magnetic field is weaker

D Magnetic field lines <u>inside</u> a bar magnet are directed from the north pole to the south pole

1.10 Consider the circuit diagram below. The light bulbs are NOT identical.

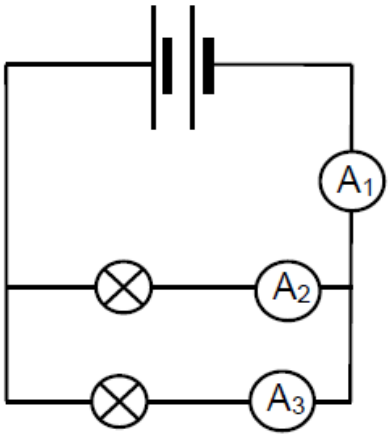

The reading on A_3 will be equal to …

A the reading on A_1.

B half the reading on A_1.

C the reading on A_1 minus the reading on A_2.

D the reading on A_3 minus the reading on A_1.

[2 x 10 = 20]

QUESTION 2 (answer on folio paper)

The diagram below shows a boy in a kayak on the ocean.

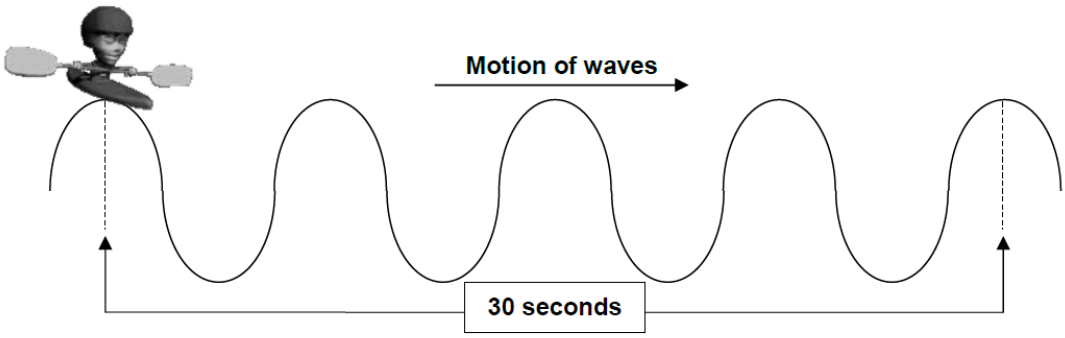

2.1 Describe the motion of the boy in the kayak while he is **NOT** rowing. (Ignore sea currents.) (1)

2.2 If the amplitude of the wave is 1,5m, how far does the boy and the kayak drop from the crest of a wave to the trough of a wave? (1)

2.3 Define the ***frequency*** of a wave. (2)

2.4 Calculate the frequency of the sea wave. Round off your answer to **THREE** decimals. (2)

2.5 If the waves cover 60 m in 30 seconds, determine the wavelength of the waves. Show all calculations. (3)

2.6 Calculate the speed of the waves. (3)

After a while, the boy in the kayak finds himself between a fishing boat and a cliff. The fishing boat sends out a sound signal by blowing its foghorn **ONCE**. The boy though, hears **TWO** sound signals.

It takes 7 seconds for the sound to move from the fishing boat until the boy hears the signal for a **SECOND** time. The speed of sound in air is 340 $m.s^{-1}$. The boy is 500 m from the cliff.

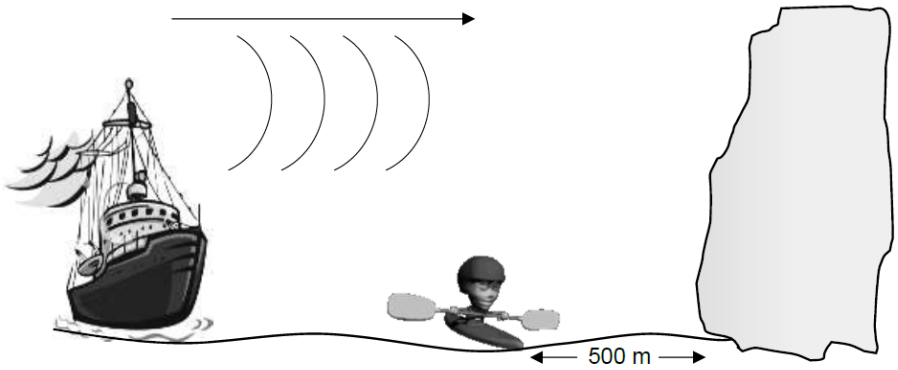

2.7 Calculate the distance between the fishing boat and the cliff. (5)

2.8 What type of wave is a sound wave? (1)

[18]

QUESTION 3

Two pulses, **P** and **Q** in a string, approach each other at the same speed. Pulse **P** has an amplitude of +6 cm when it is at position **X**. Pulse **Q** has an amplitude of 8 cm when it is at position **Z**. Points **X** and **Z** are the same distance from point **Y**. The pulses both have a length of 5,0 cm. Pulse **P** and **Q** meet at position **Y**. Assume that no energy is lost.

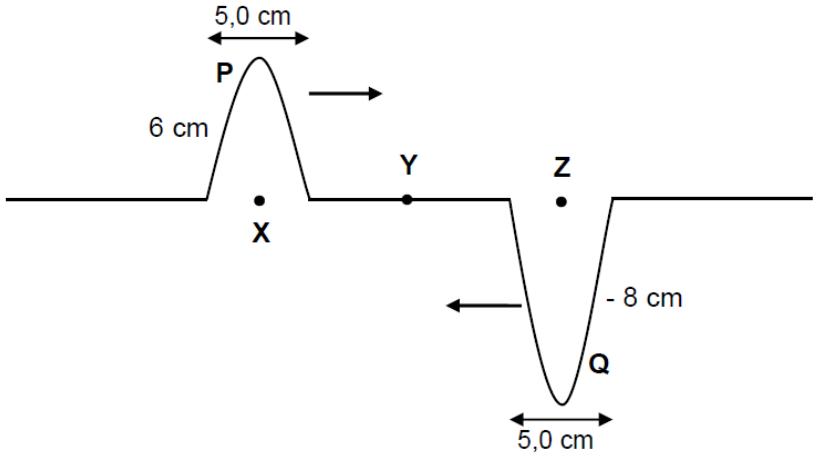

3.1 Define the term pulse. (2)

3.2 Name the phenomenon that occurs when the two pulses meet at point **Y**. (1)

3.3 Draw a labelled sketch to show what happens when pulses **P** and **Q** meet at point **Y**. (Indicate the pulse length and amplitude.) (3)

3.4 Make a labelled sketch to show what happens to pulse **P** when it reaches point **Z**. (Indicate the pulse length and amplitude) (2)

3.5 Pulse **P** travels from point **X** to point **Z**, a distance of 1,5 m, in 2,3 s. Calculate the speed of pulse **P**. (4)

[12]

QUESTION 4

4.1 Define the term ***magnetic field***. (2)

4.2 A group of learners are working with a magnet. The magnet drops and breaks into **TWO** pieces. The pieces land on the floor with the poles in the positions indicated below.

What will be the polarity of side… :

4.2.1 X (1)

4.2.2 Y (1)

4.3.1 What kind of force will be experienced between sides X and Y?
Only write down **REPULSIVE** or **ATTRACTIVE**. (1)

4.3.2 Motivate your answer in 4.3.1 by redrawing the pieces and indicating the magnetic field lines. (3)

[8]

QUESTION 5

The table below shows an arrangement of electromagnetic radiation according to their frequencies.

TYPE OF RADIATION	TYPICAL FREQUENCY (Hz)
Radio waves	$10^5 – 10^{10}$
Microwaves	$10^{10} – 10^{11}$
Infrared (IR)	$10^{11} – 10^{14}$
Visible light	$10^{14} – 10^{15}$
Ultraviolet (UV)	$10^{15} – 10^{16}$
X-rays	$10^{16} – 10^{18}$
Gamma rays	$10^{18} – 10^{21}$

5.1 Write down TWO properties of electromagnetic waves. (2)

5.2 Which radiation has the highest energy? (1)

5.3 A certain radiation has energy of $1,99 \times 10^{-20}$ J.

5.3.1 Identify the type of radiation associated with this energy. (4)

5.3.2 Give one use for this type of radiation. (1)

5.4 Explain why an electromagnetic wave does not need a medium to propagate. (3)

[11]

QUESTION 6

An aluminium rod is rubbed with a nylon cloth.

Very positive	Air
	Rabbit fur
	Perspex
	Glass
	Human hair
	Nylon
	Wool
	Fur
	Silk
Slightly positive	Aluminium
Neutral	Cotton
Slightly negative	Copper
	Silver
	Gold
	Polyester
	PVC
Very negative	Teflon

6.1 Use the Tribo-electric series above to determine the polarity of the following:

6.1.1 the aluminium rod (1)

6.1.2 the nylon cloth (1)

6.1.3 Explain your answers in 6.1.1 and 6.1.2 in terms of the transfer of subatomic particles. (3)

6.2 Two identical metal spheres, **A** and **B**, on an insulated surface, carry charges of $-2{,}3 \times 10^{-6}$ C and $4{,}5 \times 10^{-7}$ C respectively. The spheres are brought into contact with each other.

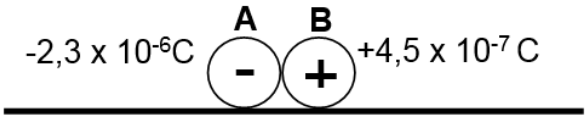

6.2.1 It is observed that the spheres move apart after contact. Briefly explain this observation. (3)

6.2.2 Calculate the new charge on each sphere after they moved apart. (3)

6.2.3 Calculate the number of electrons transferred from one sphere to the other during contact. (3)

[14]

QUESTION 7

In the circuit below, potential difference V_1 across the battery and potential difference V_2 across the 5 Ω resistor are unknown.

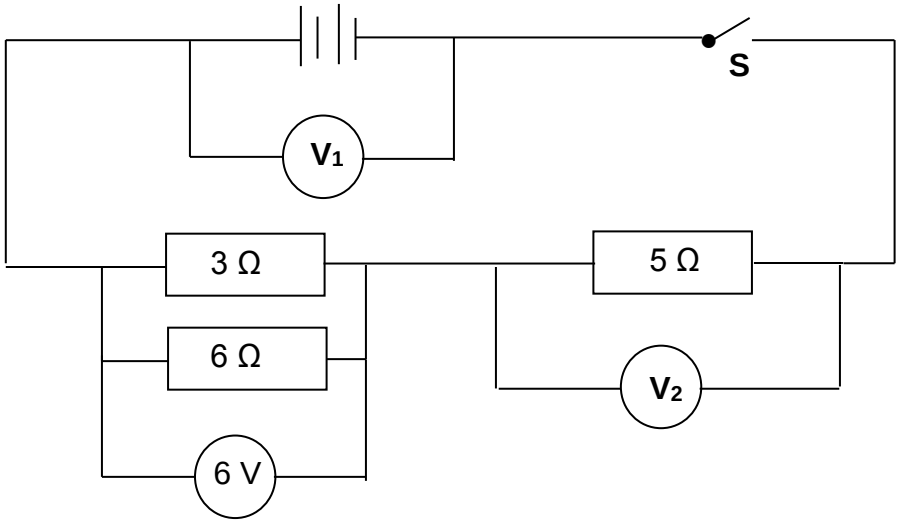

When switch S is closed briefly, the potential difference across the parallel combination is 6 V.

7.1 Define the term potential difference. (2)

Calculate the:

7.2.1 Effective resistance of the 3 Ω and 6 Ω resistors (3)

7.2.2 Reading on voltmeter V_1 (4)

7.2.3 Reading on voltmeter V_2 (2)

7.2.4 Current flowing through the 6 Ω resistor (2)

7.3 Give the four (4) factors influencing the resistance of a conductor. (4)

[17]

[Total 100]