ALEXANDER ROAD HIGH SCHOOL

MAY 2012 — $1^1/_2$ HOURS

PHYSICAL SCIENCE P.1

KB, IC — TOTAL = 75

GRADE 10

Instructions

- The question paper consists of 6 questions.
- Answer all the questions
- Answer section A on the answer sheet provided
- Answer section B on the folio sheets provided
- A non-programmable calculator may be used
- Number the answers correctly according to the numbering system used on this question paper.
- A data sheet will be provided for your use. DO NOT WRITE ON THEM.
- Round off to two (2) decimal places unless otherwise stated.

SECTION A

- Answer on the answer sheet -

QUESTION 1:

Give ONE word/term for each of the following descriptions. Write only the word/term next to the question number (1.1 – 1.5) on the attached ANSWER SHEET.

1.1 Materials in which electrons CANNOT flow at all.

1.2 The process where electric charges in a neutral object are separated so that one side of the object is negatively charged and the other side positively charged.

1.3 The amount of energy that is transferred between two points in a conductor when one coulomb of charge moves from the one point to the other.

1.4 The stream of charged particles coming from the sun which collide with particles in the earth's atmosphere causing red or green lights to glow in the sky.

1.5 A region in space where a magnet or object made of magnetic material will experience a non-contact force.

[5]

QUESTION 2: Multiple choice:

Four possible options are provided as answers to the following questions. Each question has only ONE correct answer. Choose the answer and make a cross (X) in the block (A – D) next to the question number (2.1 – 2.5) on the attached ANSWER SHEET.

2.1 If all the resistors in the circuit below are identical, in which of the following circuits will the bulb shine the brightest?

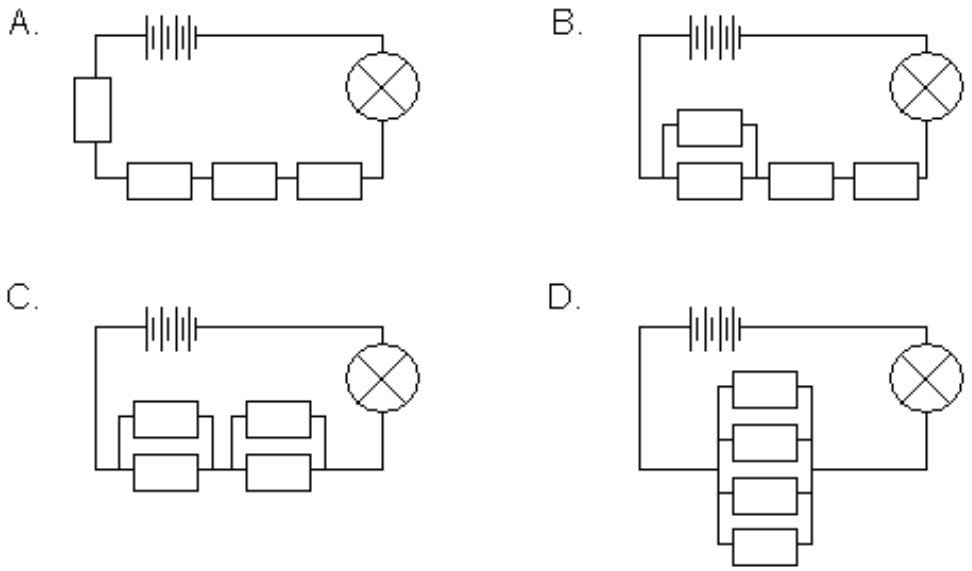

2.2 A piece of PVC pipe is rubbed with a silk cloth. When the charged PVC pipe is held near a negatively charged electroscope, it is found that the already open leaves of the electroscope close. Which of the following pairs of statements is correct?

i. The PVC pipe is negatively charged.
ii. The PVC pipe is positively charged.
iii. The silk cloth is negatively charged.
iv. The silk cloth is positively charged.

A. i. and iii.
B. i. and iv.
C. ii. and iii.
D. ii. and iv.

2.3 Which of the following 2m long conductors will provide the least resistance?

A. Diameter of 3cm, at a temperature of $100^{O}C$

B. Diameter of 3cm, at a temperature of $25^{O}C$

C. Diameter of 15mm, at $100^{O}C$

D. Diameter of 15mm, at $25^{O}C$

2.4 Which of the following properties of electromagnetic radiation is not associated with the wave nature of light?

A. Reflection B. Refraction

C. Polarization D. Photoelectric effect.

2.5 Which statement best describes sound as a pressure wave?

A. A series of alternating high pressure rarefactions and low pressure compressions.

B. A series of alternating high pressure compressions and low pressure rarefactions.

C. A series of alternating high pressure crests and low pressure troughs.

D. A series of alternating high pressure troughs and low pressure crests

[2 X 5 = 10]

SUB – TOTAL: 15

SECTION B

- Answer all questions on the folio pages provided -

QUESTION 3: Electrostatics

3.1 State the Law of Conservation of charge. (2)

3.2 Consider the diagram below that depicts two graphite covered polystyrene balls suspended from cotton threads. The one ball has a nett positive charge of 5C and the other, a nett negative charge of 3C.

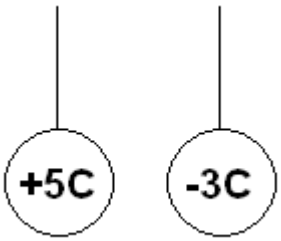

3.2.1 What will happen once the balls touch? (3)

3.2.2 Calculate the net charge on each ball once they have touched. (2)

[7]

QUESTION 4: Electric circuits

Consider the circuit below…

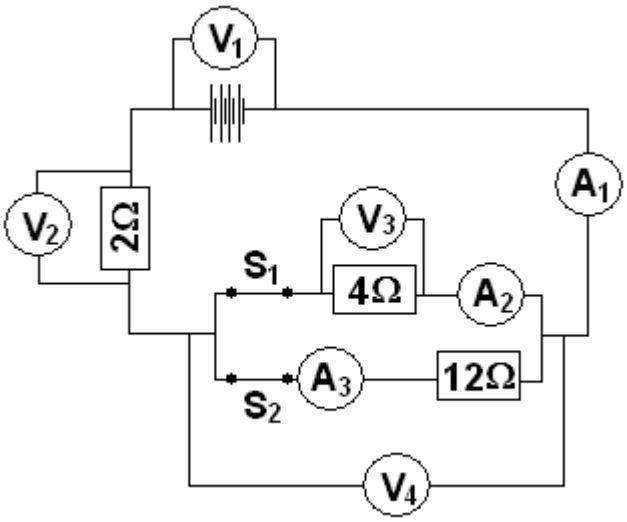

If each cell in the battery has a potential difference of 2.5V, calculate…

4.1.1 The total resistance of the circuit. (3)

4.1.2 The reading on voltmeter V_1 (1)

4.1.3 The reading on ammeter A_1 (3)

4.1.4 The reading on voltmeter V_2 (3)

4.1.5 The reading on voltmeter V_4 (2)

4.1.6 The reading on voltmeter V_3 (1)

4.1.7 The reading on ammeter A_2 (3)

4.1.8 Would the reading on ammeter A_3 INCREASE, DECREASE or STAY THE SAME if switch S_1 is opened? (1)

4.1.9 Would the reading on ammeter A_1 INCREASE, DECREASE or STAY THE SAME if switch S_1 is opened? (1)

4.2 Calculate the amount of charge that moves through a light bulb in a circuit when 150J of heat and light energy is transferred between a potential difference of 5V. (2)

4.3 Calculate the amount of charge moving through a resistor in 25minutes, in a circuit in which the current strength is 20A. (2)

[22]

QUESTION 5: Waves and sound

5.1 Consider the following diagram and answer the questions that follow.

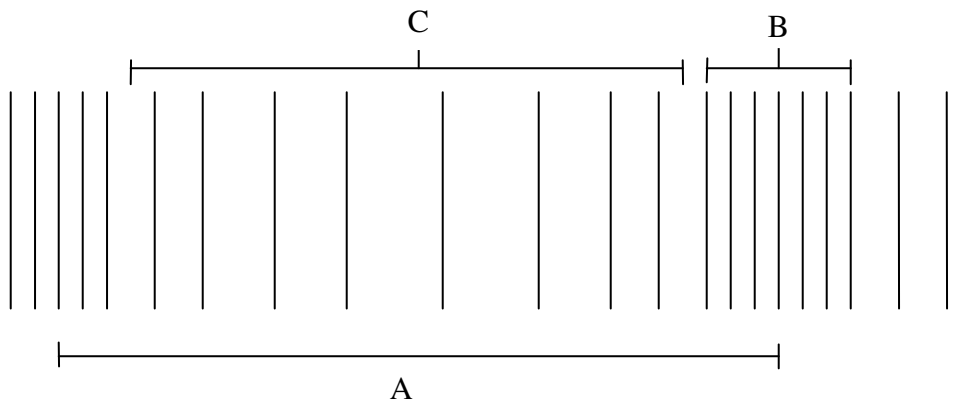

5.1.1 Is this an example of a longitudinal wave or transverse wave? (1)

5.1.2 Provide labels for A, B and C (3)

5.2 A man stands between two high cliffs. He finds that when he claps his hands he hears the echo from the one cliff within 2s and the echo from the other cliff after 3s. Calculate the distance between the two cliffs if the speed of sound is **343 m.s**$^{-1}$ (6)

5.3 3 complete transverse waves pass a point every 0,60s. What will the frequency of these waves be? (3)

[13]

QUESTION 6: Electromagnetic radiation and magnetism

6.1.1 What is meant when we say that electromagnetic radiation has a Wave-Particle Duality. (2)

6.1.2 Why can electromagnetic radiation travel through the vacuum of space but sound cannot? (2)

6.2.1 Calculate the frequency of green light with a wavelength of $5{,}2\times10^{-7}$ m (3)

6.2.2 Calculate the energy of green light at this frequency. (3)

6.3 What is the relationship between the energy and the penetrability of electromagnetic radiation? (2)

6.4 Consider the following diagram of two magnets.

6.5 Redraw the magnets and show how the magnetic fields interact (only show the part of the field that is interacting). (3)

6.6 Arrange the following types of EM radiation in order of increasing frequency: Infrared, X-rays, ultraviolet, visible, gamma. (2)

6.7 Which form of electromagnetic radiation is used in night vision technology? (1)

[18]

TOTAL = 75 marks