ALEXANDER ROAD HIGH SCHOOL

JUNE 2012 — 3 HOURS

PHYSICAL SCIENCE

IC, MA, CO — TOTAL = 150

GRADE 11

Instructions

- The question paper consists of 10 questions.
- Answer all the questions.
- Answer section A on the answer sheet provided.
- Answer section B on the folio sheets provided.
- A non-programmable calculator may be used.
- Number the answers correctly according to the numbering system used on this question paper.
- A data sheet will be provided for your use.
- Round off to two (2) decimal places unless otherwise stated.

SECTION A

- Answer on the answer sheet -

QUESTION 1:

Give ONE word/term for each of the following descriptions. Write only the word/term next to the question number (1.1 – 1.5) on the attached ANSWER SHEET.

1.1 The law when two forces act simultaneously on two objects.

1.2 A semi-conductor where the charge carriers originate from the atoms of the semi-conductor only (no specific examples).

1.3 The hand rule used to determine the direction of a magnetic field around a straight conductor carrying a current.

1.4 Ions that are present in a reaction, but don't take part in the reaction.

1.5 The name given for zero Kelvin.

[5]

QUESTION 2: Multiple choice:

Four possible options are provided as answers to the following questions. Each question has only ONE correct answer. Choose the answer and make a cross (X) in the block (A – D) next to the question number (2.1 – 2.5) on the attached ANSWER SHEET.

2.1 A constant net force acts on a body which can move freely in a straight line. Which physical quantity will remain constant?

A. Acceleration. B. Velocity.

C. Momentum. D. Kinetic energy.

2.2. If the distance between 2 charges is doubled and the one charge is halved, how does the force between the charges change?

A The force is 8 times stronger

B The force is the same

C The force is 4 times stronger

D The force is an eighth of the original force

2.3 Which of the following pairs of graphs best depicts the relationship between resistance and temperature of a conductor and semiconductor respectively?

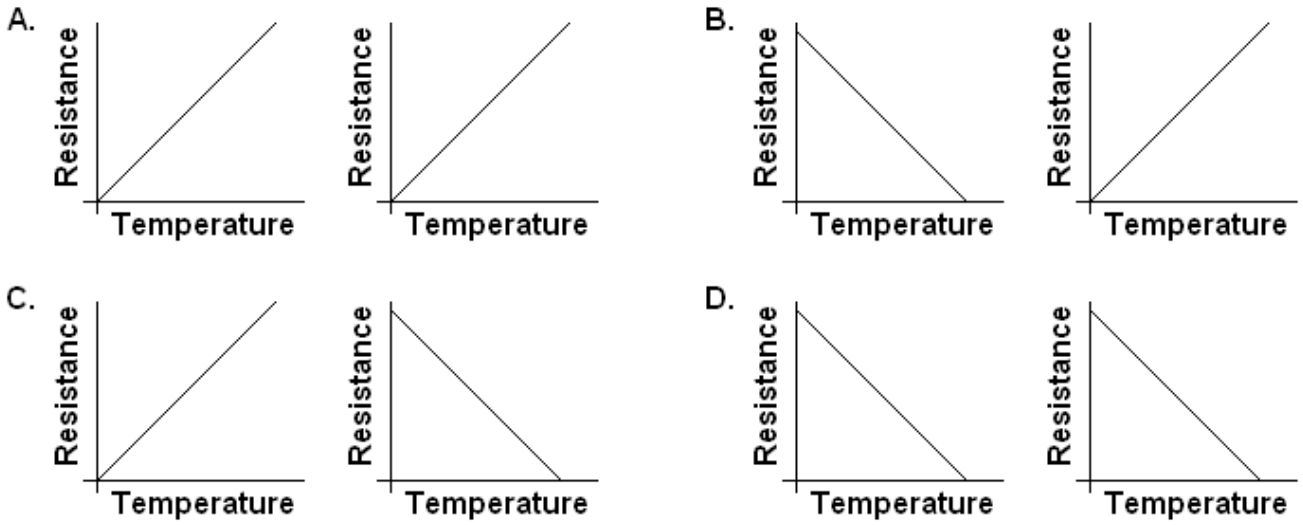

2.4 Semi-conductors conduct current by the movement of…

A. positive ions B. negative ions

C. holes and electrons D. delocalised electrons

2.5 A certain mass of an ideal gas is heated and the corresponding changes in pressure (p), volume (V) and Kelvin temperature (T) are recorded. Which one of the following graphs shows the correct relationship between p, V and T?

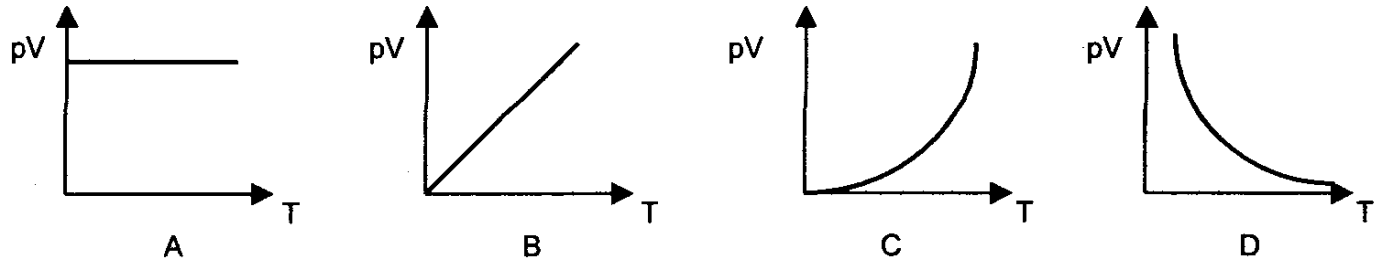

[2 X 5 = 10]

SUB – TOTAL: 15

SECTION B

- Answer all questions on the folio pages provided -

QUESTION 3: Mechanics

3. The diagram represents part of an experiment that is being used to estimate the speed of an air gun pellet.

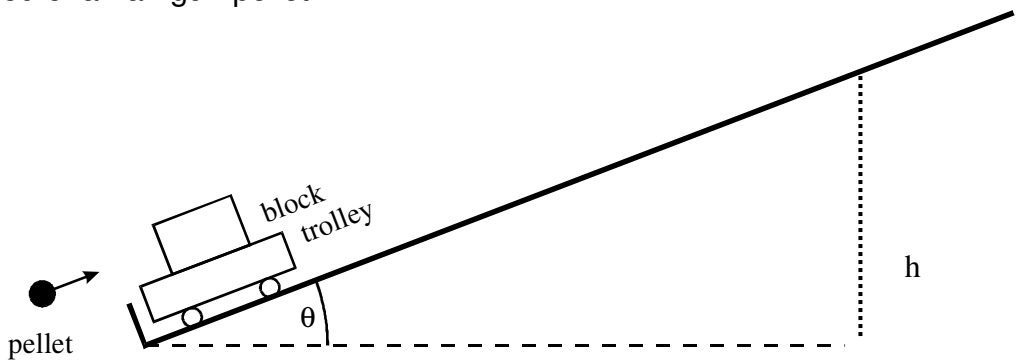

The pellet which is moving parallel to the track, strikes the block, embedding itself. The trolley and the block then move along the track, rising a vertical height, *h*. Friction cannot be ignored. The angle of the slope is 15°.

The following data is collected from the experiment

Mass of trolley, block and pellet	=	***0.50 kg***
Mass of pellet	=	***0.002 kg***
Speed of trolley and block immediately after impact	=	***0,48 m.s^{-1}***

3.1 State the Law of Conservation of Momentum. (2)

3.2 Calculate the speed of the pellet just before impact. (5)

3.3 Draw a free body diagram for the trolley, block and pellet halfway up the slope to where it reaches height **h**. (3)

3.4 Calculate the acceleration of the trolley, block and pellet half way up the slope if there is a frictional force of 2N. (6)

3.5.1 When the trolley reaches height **h** it then runs down the slope and collides with the bottom of the track. Calculate the impulse of the collision if the trolley hits the side at 1,5 m.s^{-1} and rebounds at 0,3 m.s^{-1}. (4)

3.5.2 Calculate the force the trolley exerts on the bottom of the track if the trolley is in contact with the surface of the bottom of the track for 0,45s. (4)

[24]

QUESTION 4: Electrostatics

4.1 A vacuum filled parallel plate capacitor has plates 15mm apart with surface area of the plates, 0,02m^2 each. Calculate the capacitance of this capacitor. (3)

4.2 Two charges are placed as shown in the diagram below:

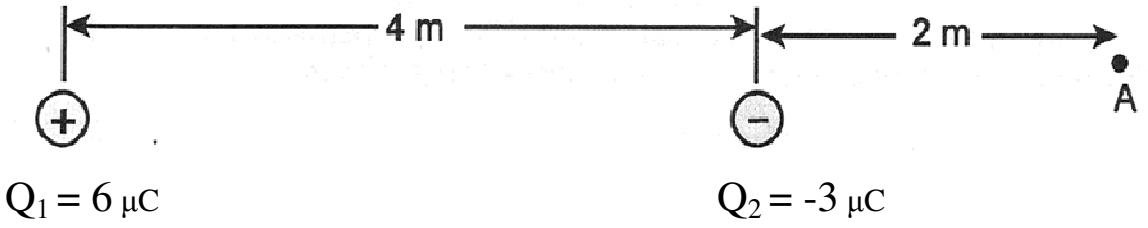

Find the magnitude and the direction of the electric field at point A. (5)

[8]

QUESTION 5: Electric circuits

In the circuit represented below, each cell has an emf of 1,6 V and an internal resistance of 0,25 Ω. Two resistors of 10 Ω and 30 Ω are connected in parallel and the ammeter is connected such that it measures the circuit current.

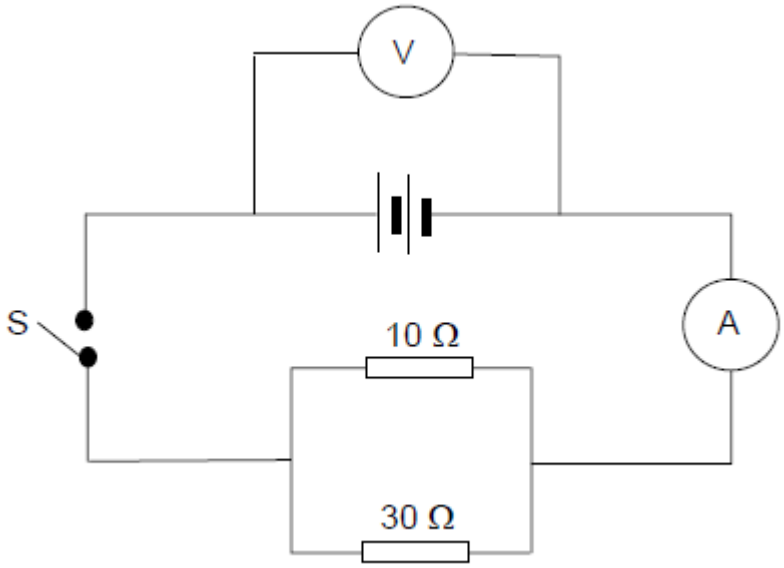

Switch S is open.

What is the reading on the following?

5.1 Voltmeter V (1)

5.2 Ammeter A (1)

Switch S is now closed.

Calculate the following:

5.3 The effective resistance of the parallel combination of resistors (4)

5.4 The reading on ammeter A (5)

5.5 The reading on voltmeter V (3)

[14]

QUESTION 6: Bonding

6. The bond energies for numerous bonds are given in $kJ.mol^{-1}$. Answer the questions that follow:

1	2	3	4	5	6
H – H	436	C – C	348	F – F	155
H – C	413	C – Cl	326	Cl – Cl	243
H – N	389	C – O	335	Br – Br	190
H – O	463	Cl – O	205	I – I	149
H – Cl	431	H – S	338	H – Br	346

Double bonds (bond order 2)		Triple bonds (bond order 3)	
O = O	498	N ≡ N	941
C = C	619	C ≡ C	845
C = O	707		

6.1 Why is there an increase in the bond energies of C-C, C=C and C≡C? (2)

6.2 Explain the difference in the bond energies between H-O and H-S. (2)

6.3 Calculate the total amount of energy released when the CO_2 molecule forms. (3)

6.4 Which type of bonding is found in the CO_2 molecule? (1)

6.5 Define the type of bonding in the previous question. (3)

6.6 In the event of the H_2 molecule forming, there are different forces acting.
These forces have different energies involved.
Draw a **labeled** graph of the potential energy versus the distance between the nuclei as two hydrogen atoms approach each other to form the molecule.
Label the different curves clearly. Also show and label the significant points on the axes. (5)

6.7 Why will the molecule Ar_2 not form? (2)

[18]

QUESTION 7: Bonding

7.1 Draw the Lewis **and** Couper structures for the oxygen molecule (3)

7.2 Explain shortly why resonance structures forms. (2)

7.3 Draw all the resonance structures of NO_3^- by using Lewis structures (3)

7.4 Consider the following and answer the questions that follow:

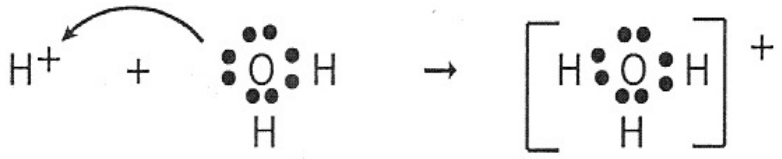

7.4.1 Give the formula or symbol of the Lewis acid. (1)

7.4.2 Give the name of the product. (1)

7.4.3 What is this type of bonding called? (1)

7.5 Give the names of the molecule shapes labeled A, B and C. (3)

A B C

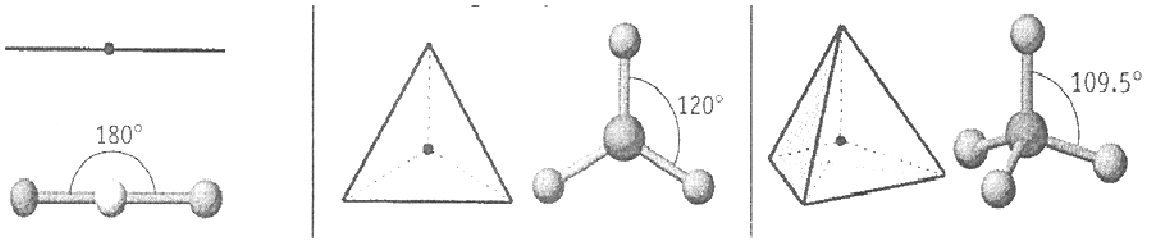

[14]

QUESTION 8: Electronic properties of matter

8.1 Explain how the conductivity of germanium can be increased by the addition of a small amount of boron (3)

8.2 The pn-juntion depicted below has been biased…

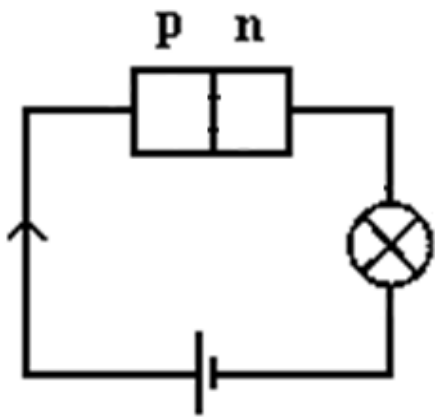

8.2.1 How has the junction been biased? Write only **FORWARD** or **REVERSE**? (2)

8.2.2 Explain your answer to 8.2.1 by referring to the diagram above. (2)

8.2.3 Name two everyday uses of the pn-juction (2)

8.3 Indicate which of the following semi-conductors are p-type and which are n-type…

8.3.1 Silicon doped with boron

8.3.2 Silicon doped with arsenic

8.3.3 Germanium doped with nitrogen (3)

[12]

QUESTION 9: Chemical reactions

9.1 Consider the reaction where nitric acid reacts with potassium hydroxide

$$HNO_3\ (aq) + KOH\ (aq) \rightarrow KNO_3\ (aq) + H_2O\ (l)$$

9.1.1 Write the above equation in its full ionic form. (3)

9.1.2 Write the Net ionic equation for the reaction. (2)

9.1.3 Give the name of the type of reaction occurring in 9.1. (1)

9.1.4 Nitric acid is a strong acid. Explain what it means for an acid to be “strong”. (2)

9.2 Consider the REDOX reaction between solid zinc metal and bromine gas.

$$Zn\ (s) + Br_2\ (g) \rightarrow ZnBr_2$$

9.2.1 Write the reduction half reaction for the reaction. (2)

9.2.2 Write the oxidation half reaction for the reaction. (2)

9.2.3 Write down the formula of the oxidizing agent. (1)

9.3 Consider the following three compounds…

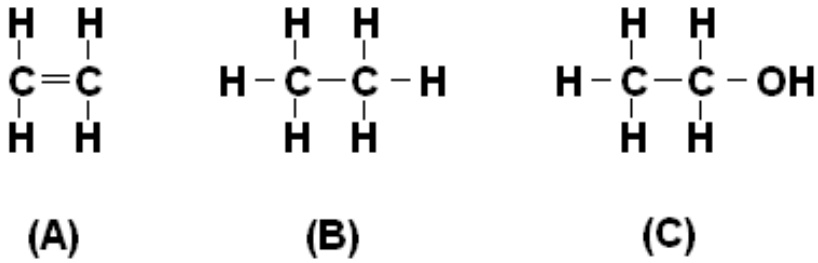

9.3.1 Name the homologous series to which compound B belongs (2)

9.3.2 Which compound A, B or C is unsaturated? (1)

9.3.3 Compound C can be prepared from compound A using which other reactant? (1)

9.3.4 What is the specific name of the reaction that occurs in question 9.3.3? (2)

9.3.5 What catalyst is needed in the reaction taking place in question 9.3.3? (1)

9.3.6 Compound A can be prepared from compound B via which of the following reactions?

Addition substitution elimination

Write down only the correct answer between the three reactions. (2)

[22]

QUESTION 10: Gases

10.1 State Boyle’s law. (2)

10.2 Draw a graph of the relationship of the Law in Question 10.1 (3)

10.3 A gas bubble deep below the surface of the sea has a volume of 200 cm^3 at a temperature of 8 ^oC. This bubble rises, and when it reaches the surface where the temperature is 15 ^oC and the pressure is standard atmospheric pressure the volume has increased to 550 cm^3.
Calculate the pressure at the original depth. (6)

10.4 Under what conditions of temperature and pressure, will the behaviour of a real gas **correspond** to that of an ideal gas? (4)

10.5 Calculate the temperature in ^oC of 24 g of oxygen at a pressure of 249 kPa in a vessel of capacity 4 dm^3. (8)
[23]

TOTAL: 150 MARKS