ALEXANDER ROAD HIGH SCHOOL

JUNE 2017 3 HOUR

PHYSICAL SCIENCES MID-YEAR EXAMINATION PAPER 1

CO, KB, MH TOTAL = 150

GRADE 12

Instructions

- The question paper consists of 4 questions.
- Answer all the questions.
- Answer section A on the answer sheet provided AND section B on folio sheets.
- Rule off after each question in Section B.
- A non-programmable calculator may be used.
- Number the answers correctly according to the numbering system.
- Round off to two (2) decimal places where necessary.
- Formulas and a periodic table have been included at the end of the question paper

---

SECTION A

- Answer on the answer sheet -

QUESTION 1: Multiple choice

Four possible options are provided as answers to the following questions. Each question has only 1 correct answer. Choose the correct answer and write the letter (A – D) next to the relevant question number (1.1 – 1.6) on the answer sheet.

1.1 An object is pulled along a straight horizontal road to the right without being lifted. The net force diagram below shows all the forces acting on the object.

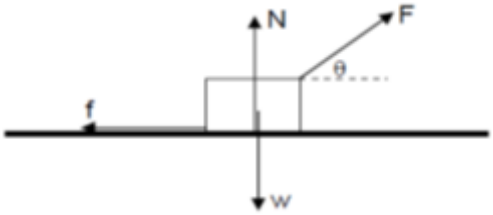

Which ONE of the above forces does POSITIVE work on the object?

A w

B N

C f

D F

1.2 The free-body diagram below shows the relative magnitues and direction of all the forces acting on an object moving horizontally in an easterly direction.

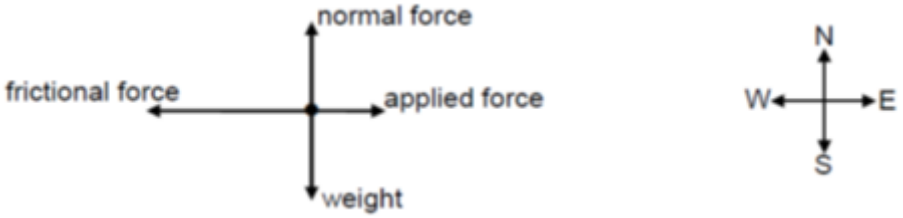

The kinetic energy of the object..

A is zero

B increases

C decreases

D Remains constant

1.3 In the diagram below, a 10000kg truck travels up a straight inclined road of length 50m at a constant speed of 5,6 $m.s^{-1}$. The total work done **by the engine** of the truck to get there is 1,52 $x10^6$J.The work done to overcome **friction** is 1,85 x 10^5J. Calculate the height,h, reached by the truck at the top of the road.

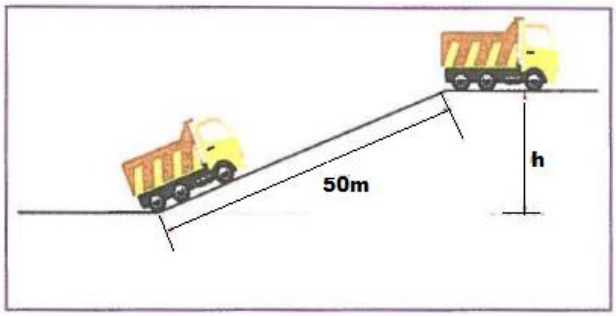

A 1,33m **B** 13,62m **C** 15,5m **D** 1,89m

1.4 A girl in the basket of a hot air balloon moves upwards at a velocity of 5 $m.s^{-1}$. She throws a ball from the moving balloon. If an observer on the ground sees the ball moving from the girl's hand at 7 $m.s^{-1}$ downwards, what was the velocity that the girl threw the ball with?

A 12 $m.s^{-1}$ downwards

B 7 $m.s^{-1}$ downwards

C 2 $m.s^{-1}$ upwards

D 2 $m.s^{-1}$ downwards

1.5 A ball is thrown straight up into the air and reaches its maximum height after 3s. If we choose DOWN as our positive reference direction, the velocity and acceleration of the ball can, after 4 seconds, be represented respectively as:

	Velocity	Acceleration		Velocity	Acceleration
A	- 9,8 $m.s^{-1}$	9,8 $m.s^{-2}$	**C**	- 9,8 $m.s^{-1}$	- 9,8 $m.s^{-2}$
B	9,8 $m.s^{-1}$	9,8 $m.s^{-2}$	**D**	9,8 $m.s^{-1}$	- 9,8 $m.s^{-2}$

1.6 A ball of mass "m" strikes a wall with a speed of "v". If the ball rebounds in the opposite direction without any change in speed, its impulse would be…

A 0 **B** mv **C** 2mv **D** 3mv

1.7 If the force between two charges is F, and both charges are doubled and the distance between them is halved, what will the relationship be between the new force (F_{new}) and F?

A $16xF_{new} = F$

B $F_{new} = 16xF$

C $8xF_{new} = F$

D $F_{new} = 8xF$

1.8 A man stands next to the road as an emergency vehicle approaches him with its sirens blaring and the red flashlights on. He makes the following observations:

	Frequency of sound heard by man	Colour of flashlight observed
A	Higher	Red
B	Lower	Red
C	Higher	Blue
D	Lower	Blue

1.9 Which ONE of the following forces always acts perpendicular to the surface on which a body is placed?

A Gravitational force

B Frictional force

C Tension force

D Normal force

1.10 An alternating current with a peak value I and a constant dirent current of 4 A has the same heating effect on two idential bulbs. What is the value of I ?

A

[2 x 6 = 12]

SECTION B

QUESTION 2:

A 5 kg mass and a 15 kg mass are connected by a light inextensible string which passes over a light frictionless pulley. Initially the 5 kg mass is held stationary on a horizontal surface, while the 15 kg mass hangs vertically downwards as shown in the diagram below.

The diagram is not drawn to scale.

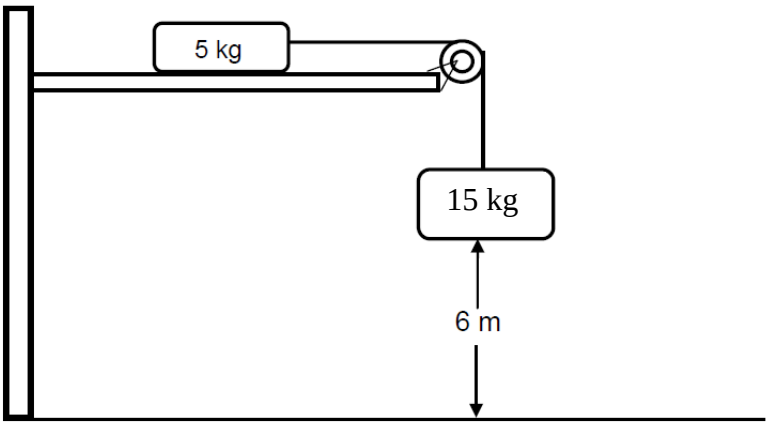

When the 5 kg mass is released, the two masses begin to move. The coefficient of kinetic friction, μ_k, between the 5 kg mass and the horizontal surface is 0,4.

Ignore the effects of air friction. Calculate the acceleration of the 15 kg mass. **[5]**

QUESTION 3:

3.1 State Newton's law of gravitation. (3)

3.2 If the force between two masses is 5N, and the masses are moved 2,25 times further apart, and the one mass is halved, what is the new force between the masses? (4)

[7]

QUESTION 4

4.1 A 5kg block is moving along a horizontal surface at a velocity at 4m.s-, and strikes a rough surface at point A. The block slides 2m to B while experiencing a frictional force of 35N. It then moves up a rough incline at an angle of 30° to the horizontal. The friction on the incline is 29N and it moves a distance X before coming to rest.

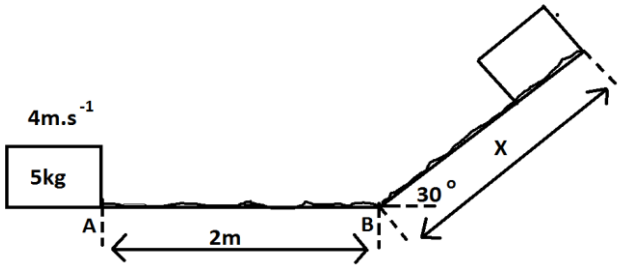

4.1.1 Draw a free body diagram to show all the forces as the block slides from A to B (3)

4.1.2 State the WORK-ENERGY theorem in words. (2)

4.1.3 Calculate the speed of the block at the bottom of the incline, at point B. (4)

4.1.4 Draw a free body diagram to show all the forces as the block slides up the incline (3)

4.1.5 Calculate the distance, X, the block slides up the incline (6)

4.1.6 If the block takes 2,5 s to move from the bottom of the incline until it comes to rest, calculate the power of the block as it moves up the incline. (3)

4.2 A 2kg toy car moves from the bottom of an incline, initially travelling at $5m.s^{-1}$, and travels 4m before coming to rest. While moving up the incline the car experiences a frictional force of 3N.

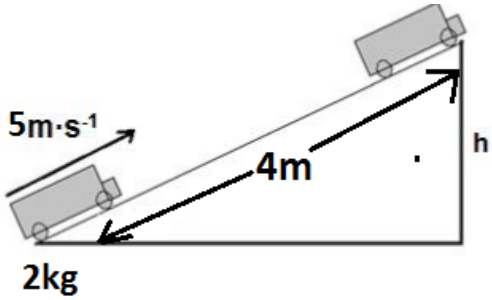

4.2.1 Determine the height (h) that the car reaches as it comes to rest. (5)

[26]

QUESTION 5:

5.1 State the Doppler effect in words. (2)

Reflection of sound waves enables bats to hunt for moths. The sound wave produced by a bat has a frequency of 200 kHz and a wavelength of 1,6 x 10^{-3} m.

5.2 Calculate the speed of the sound wave though the air. (3)

5.3. A stationary bat sends out a sound signal and receives the same signal reflected from a moving moth at a frequency of 230 kHz.

5.3.1 Is the moth moving TOWARDS or AWAY FROM the bat? (1)

5.3.2 Calculate the magnitude of the velocity of the moth, assuming that the velocity is constant. (6)

[12]

QUESTION 6:

Sebastian lies on his back on the Heart balcony and Ashley stands on the field, 5m directly below. They try to find out (calculate) with which velocity Ashley needs to throw a tennis ball (A) vertically upwards in order for it to pass the exact height that Sebastian threw another ball (B) from. The two balls need to pass each other when B is returning downwards at that height (dotted line), and A is on its way upwards, B had a starting velocity of 5,5 m.s^{-1}.

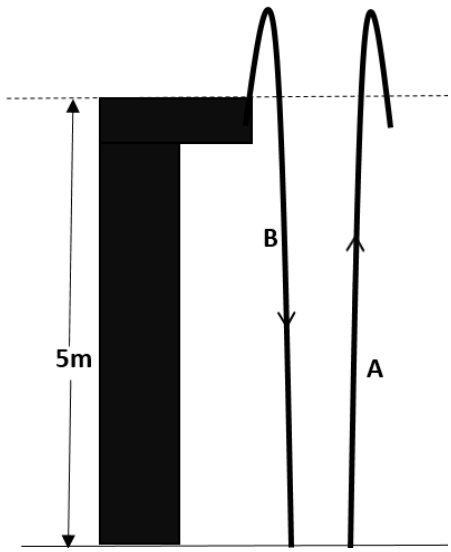

6.1 Calculate the time that ball B takes to reach the same levelas what it was projected from (level shown by dotted line). (4)

6.2 Calculate the magnitude of the initial velocity of ball A. (9,95m.s-1) (5)

6.3 Calculate the time it take for ball B to reach the ground. (4)

6.4 Draw a velocity versus time graph for ball B from projection to landing on the ground; on soft grass with no bouncing. Indicate the following on the graph:

- Initial velocity
- Time that it takes to reach the same height as being projected from
- Time that it takes to reach the ground (3)

[17]

QUESTION 7:

In a shunting yard, two railway trucks are moving in the same direction at different speeds, as shown in the sketch. The two trucks collide and link together.

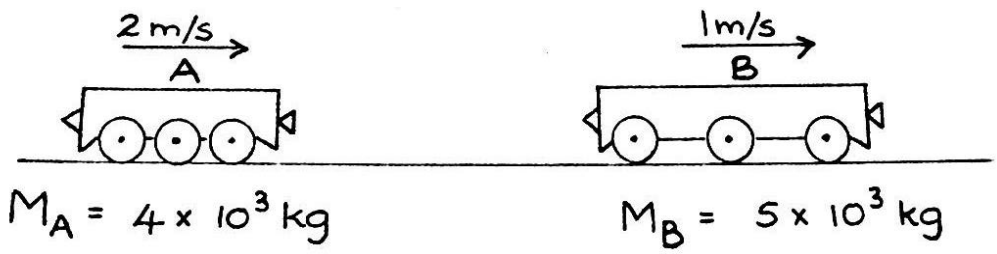

7.1 Calculate the velocity of the two linked trucks after the collision. (6)

7.2 State, in words, the law that you used in answering the above question. (2)

7.3 Calculate the change in momentum of truck B. (3)

7.4 If the collision lasts 0,05s, calculate the net force on truck B (3)

[16]

QUESTION 8:

8.1 Two charged baloons, A and B, with opposite charges touch each other and then are separated to a distance of 10 cm between their centres.

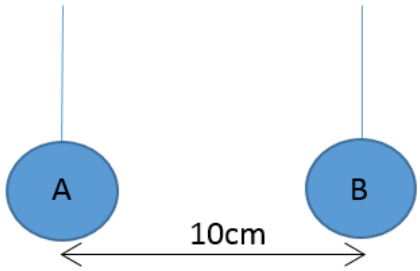

The charge on both balloons after they are separated is 5 μC and 5×10^{16} electrons moved over from the one balloon to the other. Calculate the charge that the other balloon had before they touched. (3)not enough marks

8.2 Draw the field pattern that exists between the two charged balloons AFTER they were separated. (3)

8.3 Calculate the net electric field strength at a point that is 5 cm to the right of balloon B (after they were separated). (5)

[11]

QUESTION 9:

9.1 Consider the electrodynamic device below:

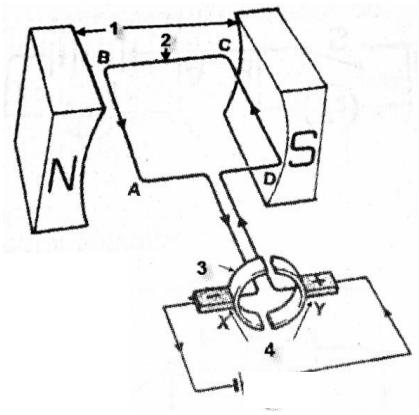

9.1.1 State the effect or principle that the electrodynamic device is working by. (3)

9.1.2 Determine the direction that the coil will turn. Only state CLOCKWISE or ANTI-CLOCKWISE. (1)

9.1.3 Name the component(s) 4. (1)

9.1.4 What is the function of component 4? (1)

9.1.5 Name component 3. (1)

9.1.6 Explain the working of component 3 when the coil has turned 90°. (1)

9.1.7 State one alteration/change that can be made to increase the power of this device. (1)

9.1.8 Give one use for THIS device. (1)

9.2 Another electrodynamic devise is shown below.

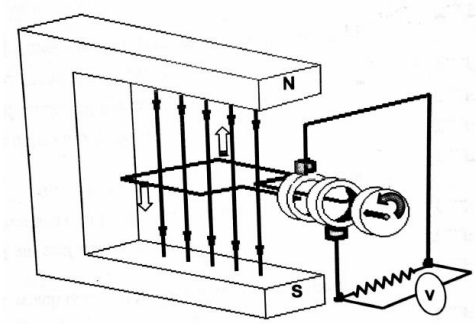

9.2.1 Name this device. (1)

9.2.2 What is the energy conversion in this device? (2)

9.2.3 Which hand rule will be used to determine the current direction? (1)

9.2.4 Draw a labled graph of Voltage versus rotation angle for one rotation of the coil, starting in the position as indicated in the sketch. (2)

[16]

QUESTION 10:

A source provides an rms potential difference of 36 V to a 4 Ω and an 8 Ω speaker connected in series, as shown in the diagram below.

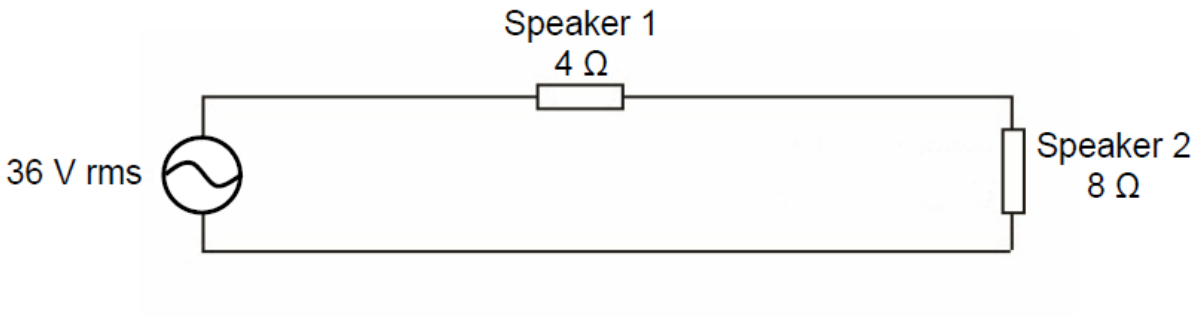

10.1.1 What type of energy source is used in this circuit? (1)

Calculate the following:

10.1.2 rms current through the 4 Ω speaker (3)

10.1.3 Peak current through each speaker (3)

10.1.4 Average power dissipated by the 4 Ω speaker (3)

10.2 Without using a calculation, state how the average power dissipated by the 4 Ω speaker compares with the power dissipated by the 8 Ω speaker. Give a reason for the answer. (3)

[13]

QUESTION 11:

Graph P shows how the maximum kinetic energy of electrons emitted from the cathode of a photoelectric cell varies with the frequency of the incident radiation.

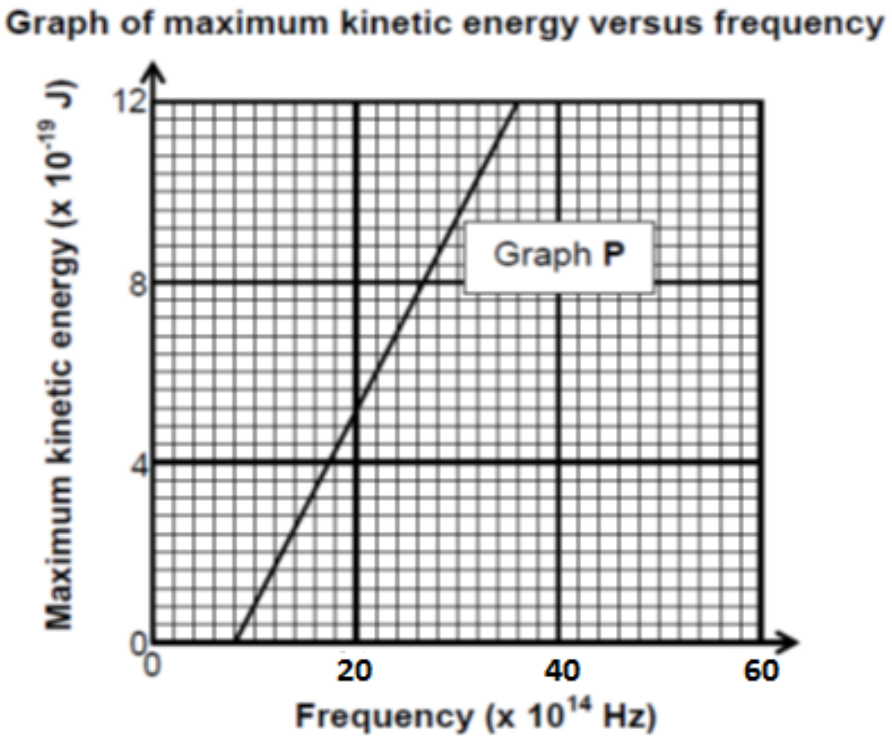

11.1 Using the graph, determine the threshold frequency for the metal cathode. (1)

11.2 Define the term work function (2)

11.3 Calculate the work function for the metal cathode. (3)

11.4 Calculate the velocity of the photoelectrons emitted when the frequency if of the incident of light is 16 x 10^{14} Hz. (5)

[11]

TOTAL 150 MARKS