ALEXANDER ROAD HIGH SCHOOL

JUNE 2017 3 HOUR

PHYSICAL SCIENCES MID-YEAR EXAMINATION PAPER 2

CO, KB, MH TOTAL = 150

GRADE 12

Instructions

- The question paper consists of 10 questions.
- Answer all the questions.
- Answer section A on the answer sheet provided AND section B on folio sheets.
- Rule off after each question in Section B.
- A non-programmable calculator may be used.
- Number the answers correctly according to the numbering system.
- Round off to two (2) decimal places where necessary.
- Formulas have been included at the end of the question paper and a periodic table on the back of the answer sheet.

SECTION A

- Answer on the answer sheet -

QUESTION 1: Multiple choice

Four possible options are provided as answers to the following questions. Each question has only 1 correct answer. Choose the correct answer and write the letter (A – D) next to the relevant question number (1.1 – 1.6) on the answer sheet.

1.1 In the reaction

$$X + H_2O \rightleftharpoons H_3O^+ + HSO_4^-$$

X represents

A the acid SO_4^{2-}

B the base SO_4^{2-}

C the acid H_2SO_4

D the base H_2SO_4

1.2 The pH of a certain solution is 4. What will happen to the pH if a few drops of HCl is added to the solution?

A more than 4

B less than 4

C stay the same

D neutral

1.3 A strong acid is titrated against a weak base. What would a suitable indicator be for the titration?

A phenolphthalein

B bromothymol blue

C universal indicator

D methyl orange

1.4 Which one of the following substances will have the strongest intermolecular force

A BF_3

B CH_4

C NH_3

D HCl

1.5 Which of the following reactions will NOT take place spontaneously?

A $Zn\ (s) + Sn^{2+}\ (aq) \rightarrow Zn^{2+}\ (aq) + Sn\ (s)$

B $Pb\ (s) + Fe^{2+}\ (aq) \rightarrow Pb^{2+}\ (aq) + Fe\ (s)$

C $Mg\ (s) + Co^{2+}\ (aq) \rightarrow Mg^{2+}\ (aq) + Co\ (s)$

D $Al\ (s) + Cr^{3+}\ (aq) \rightarrow Al^{3+}\ (aq) + Cr\ (s)$

1.6 In a Zn/Cu galvanic cell the anode

A is the positive electrode

B is the electrode where reduction occurs

C is the Cu electrode

D undergoes a reduction in mass

1.7

A chemical reaction between an acid and a metal proceeds too rapidly during an experiment. What adjustments can be made to make the experiment safer?

	METAL	ACID	TEMPERATURE
A	Finer pieces	More concentrated	Lower
B	Finer pieces	Less concentrated	Higher
C	Larger pieces	Less concentrated	Lower
D	Larger pieces	More concentrated	Higher

1.8 The equilibrium for a certain reaction lies far to the right. The most probable value for the equilibrium constant at this temperature is

A 1

B 0

C 50

D $0,5 \times 10^{-2}$

1.9 The following equilibrium is established in a closed container at constant temperature.

$$2\ SO_2\ (g) + O_2\ (g) \rightleftharpoons 2\ SO_3\ (g) \qquad \Delta H < 0$$

At the start of the reaction, equal numbers of moles of SO_2 and O_2 are placed in the container. Which one of the following statements are true at the equilibrium position?

A $[SO_2]^2.[O_2] = [SO_3]^2$

B $[SO_2]^2 = [O_2] = [SO_3]^2$

C $[SO_2] < [O_2]$

D $[SO_2] = 2[O_2]$

1.10 Three identical bulbs (L) are connected to a potential source, as shown in the circuit diagram. The internal resistance of the battery may not be neglected. If bulb X blows, how will it affect the readings on A and V?

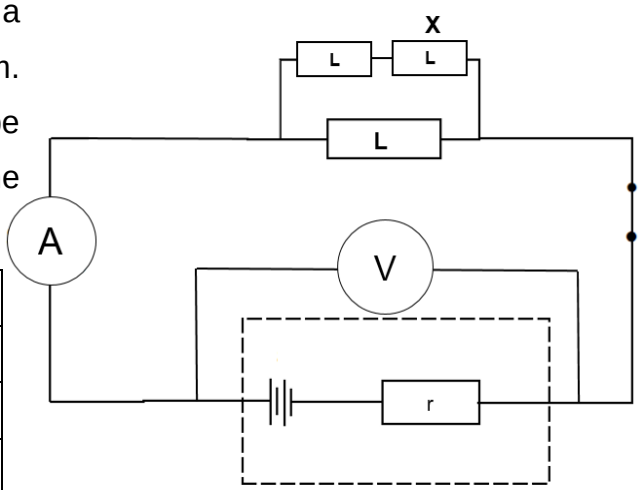

	Reading on A	**Reading on V**
A	Decreases	Stays the same
B	Decreases	Increases
C	Increases	Increases
D	Increases	Stays the same

[2 x 10 = 20]

SECTION B

QUESTION 2

2.1 Three resistors, R_1, R_2 and R_3, are connected to a battery, as shown in the circuit diagram below. The internal resistance of the battery is 0,3 Ω. The resistance of R_2 and R_3 is equal. The resistance of R_1 is half that of R_2. When both switches are open, the voltmeter across the battery reads 9 V.

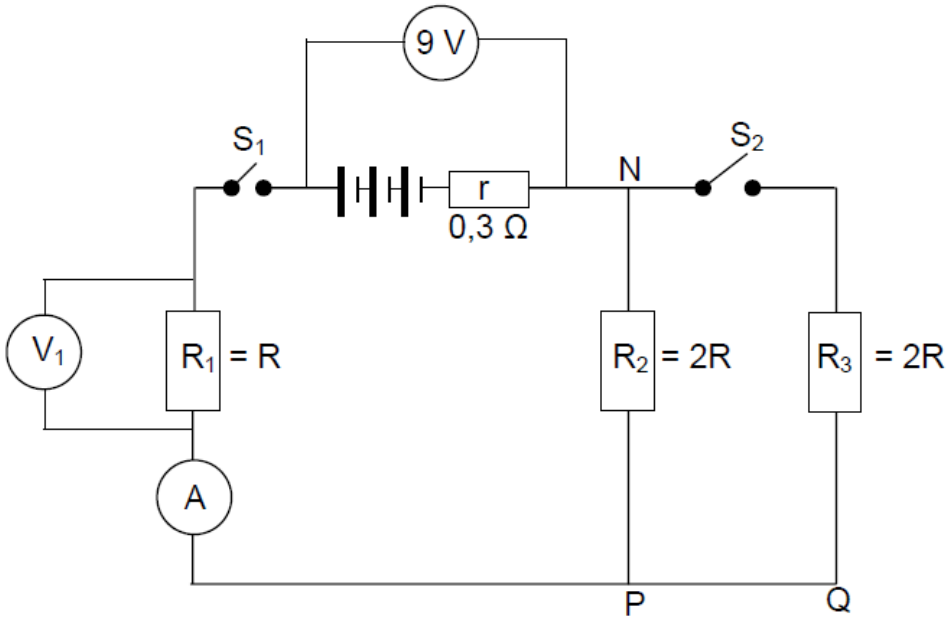

2.1.1 What is the value of the emf of the battery? Give a reason for your answer. (2)

2.1.2 Define the term emf. (2)

2.1.3 When **only switch S_1 is closed**, the reading on the ammeter is 3 A. Calculate the resistance of R_1. (5)

2.2 Both switches S_1 and S_2 are now closed.

2.2.1 How will the resistance of the circuit change? Write down only INCREASES, DECREASES or REMAINS THE SAME. (1)

2.2.2 A conducting wire of negligible resistance is connected between points Q and N. What effect will this have on the 'lost volts'? Explain the answer. (3)

2.3 Learners conduct an experiment as shown in the diagram.

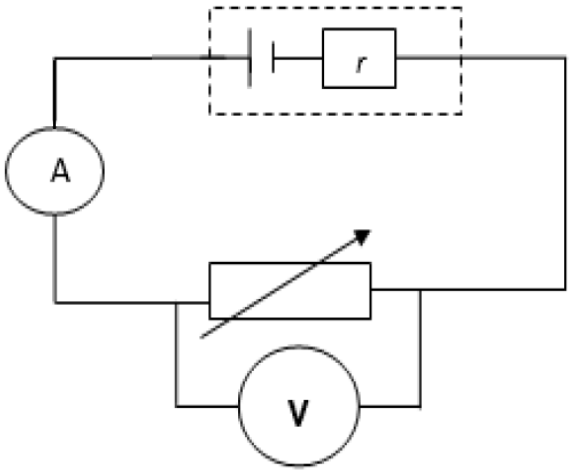

The results obtained are shown in the graph:

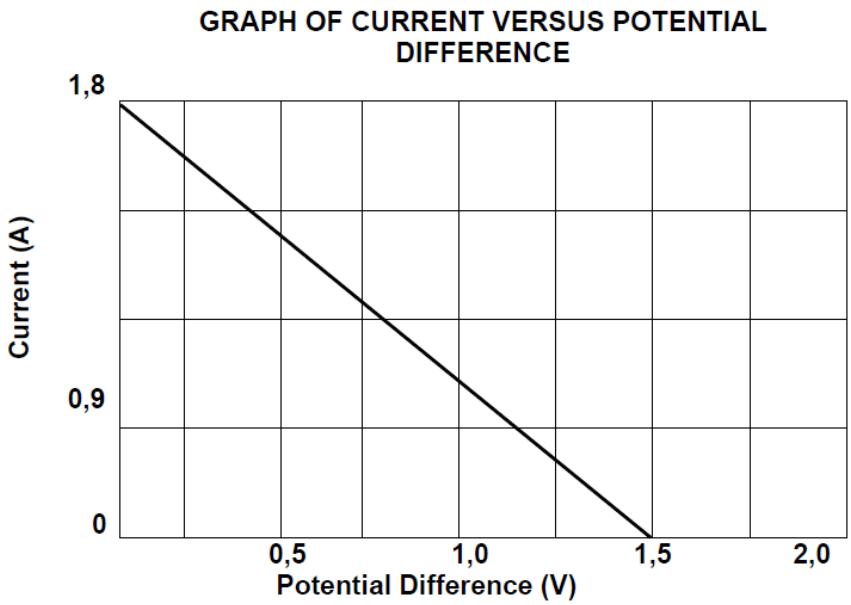

USE THE GRAPH to determine the:

2.3.1 emf (ε) of the battery (1)

2.3.2 Internal resistance of the battery (you may NOT simply use the equation $\varepsilon = IR + Ir$ and substitute values – rather use it to derive a graph equation and graph properties). (4)

2.4 The resistance of the rheostat is now increased. How will this change the voltmeter reading? Write down INCREASES, DECREASES or REMAIN THE SAME. (1)

[19]

QUESTION 3

3.1.1 Define a strong acid. (2)

3.1.2 How would a weak acid differ from a strong acid? (2)

3.2 A learner decided to conduct an experiment by measuring the pH of common acids and bases using a pH meter. A table was drawn up with her results and they were as follows

Common acid or base	pH
Hydrochloric acid	2
Oxalic acid	4
Ammonia	8
Sodium hydroxide	11

Answer the questions that follow:

3.2.1 Calculate the $[H_3O^+]$ of the Oxalic acid solution. (3)

3.2.2 If the original concentration of the Oxalic acid used was 0,01 $mol.dm^{-3}$, determine whether Oxalic acid is a Strong or weak acid. Explain. (3)

3.2.3 Calculated the $[OH^-]$ in the original sodium hydroxide solution (3)

3.2.4 If Oxalic acid is titrated against sodium hydroxide, name a suitable indicator for the titration. (1)

3.3 A learner wanted to perform the test for carbon dioxide. He placed $CaCO_3$ in a beaker and then slowly added HCl to the beaker. The learner was originally given a 30 cm^3 volume of HCl which had a concentration of 0,5 $mol.dm^{-3}$.

The equation for this reaction is as follows:

$$CaCO_3 + HCl \longrightarrow CaCl_2 + H_2O + CO_2$$

The learner then decided to use the left-over acid from the first test and titrate it against a solution of KOH. From the titration that followed it showed that 12cm^3 of KOH (of concentration 0,80 $mol.dm^{-3}$) was needed to neutralise the left over acid.

The reaction for the equation is as follows:

$$HCl + KOH \longrightarrow KCl + H_2O$$

Using this information answer the questions that follow:

3.3.1 From the titration, determine the volume of the left-over HCl used in the titration. (4)

3.3.2 Using your answer in 3.3.1 determine the volume used in test 1. (1)

3.3.3 Determine the mass of the CaCO3 used in the first test. (6)

[25]

QUESTION 4

4.1 Will I_2 dissolve in H_2O? Explain your answer. (4)

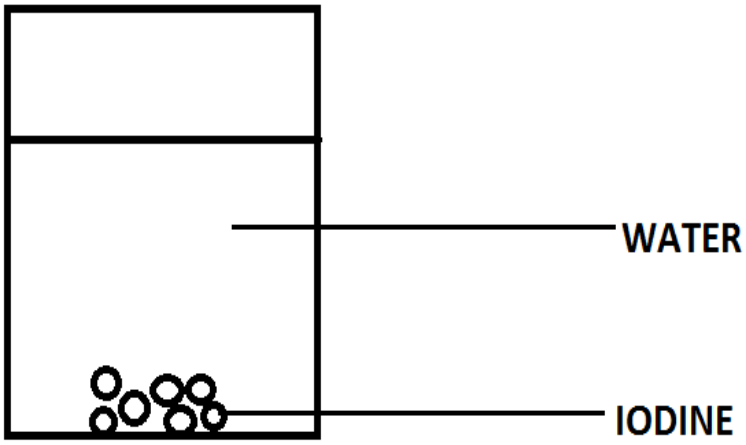

4.2 Which of the following will have the higher boiling point: CCl_4 or HCl?
(Explain using your knowledge of intermolecular forces) (6)

[10]

QUESTION 5

The diagram below represents a galvanic cell operating under standard conditions.
I

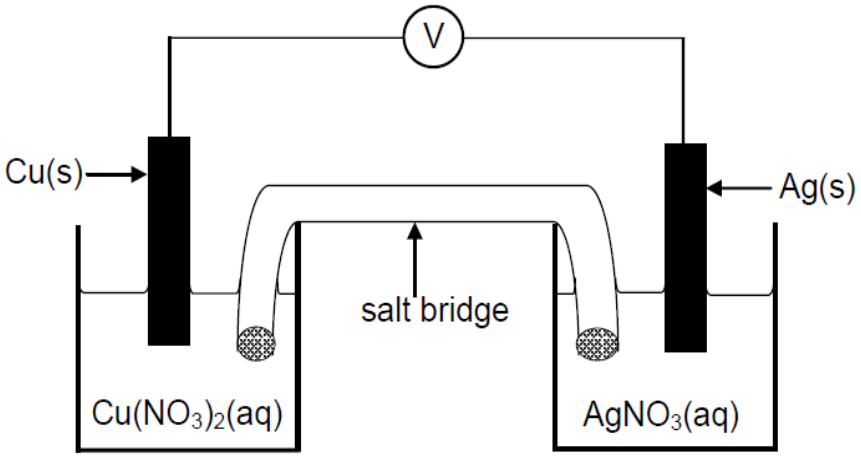

5.1 Write down the energy conversion in the cell. (1)

5.2 The cell notation for the cell (indicate operating conditions). (4)

5.3 Calculate the emf of this cell. (4)

5.4 In which direction will electrons flow? Write down only 'from Ag to Cu' or from 'Cu to Ag'. (1)

5.5 Give TWO functions of the salt bridge. (2)

[12]

QUESTION 6

The diagram below represents the apparatus used in the electrolysis of a concentrated $CuCl_2$ solution. A and B are two carbon electrodes connected to a power supply.

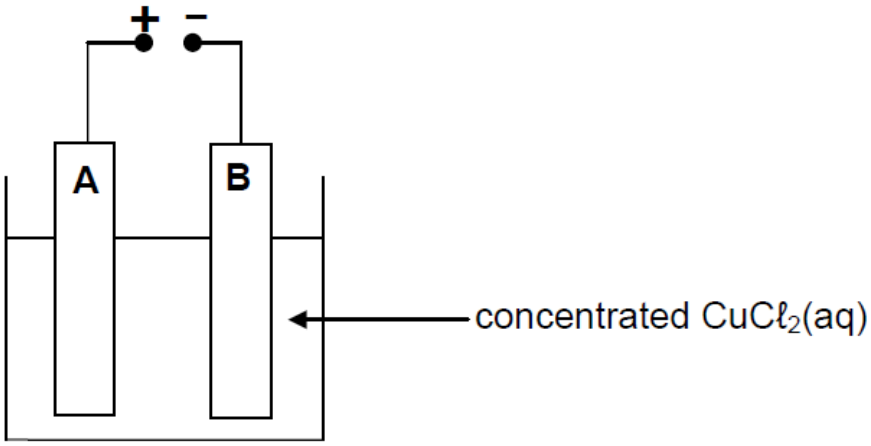

6.1	Which product forms at A?	(1)
6.2	Is A the anode or the cathode?	(1)
6.3.1	Is the process endothermic or exothermic?	(1)
6.3.2	Give a reason for your answer in 6.3.1	(1)
6.4.1	Will the mass of electrode B increase, decrease or remain constant?	(1)
6.4.2	Give a reason for your answer at 6.4.1.	(1)
6.4.3	Write down the half reaction happening at B.	(2)
6.5	Give two reasons (except that C is a solid), why carbon is suitable to be used as an electrode.	(2)
		[10]

QUESTION 7

A group of learners uses the reaction of EXCESS hydrochloric acid with zinc to investigate factors which influence reaction rate. The balanced equation for the reaction is:

$$Zn(s) + 2HCl(aq) \rightarrow ZnCl_2(aq) + H_2(g)$$

They use the same volume of hydrochloric acid and 1,2 g of zinc in each of five experiments. The reaction conditions and temperature readings before and after completion of the reaction in each experiment are summarised in the table below.

Experiment	REACTION CONDITIONS				Time (s)
	Concentration of HCℓ ($mol \cdot dm^{-3}$)	Temperature (°C)		State of division of the 1,2 g of Zn	
		Before	After		
1	0,5	20	34	granules	50
2	0,5	20	35	powder	10
3	0,8	20	36	powder	6
4	0,5	35	50	granules	8
5	0,5	20	34	granules	11

7.1 Is the reaction between hydrochloric acid and zinc EXOTHERMIC or ENDOTHERMIC? Give a reason for your answer by referring to the data on the table. (2)

7.2 For this project there were two dependent and two independent variables. Name the ..

7.2.1 dependent variables (2)

7.2.2 independent variables (2)

7.3 Give a reason for the difference in reaction rates between Experiments 1 and 2. (1)

7.4.1 Experiment 5 has a higher reaction rate than Experiment 1. Write down the factor responsible for the difference. (1)

7.4.2 Fully explain, by referring to the collision theory, how the factor in 7.4.1 affects reaction rate. (4)

[12]

QUESTION 8

Anhydrous copper chloride is yellow. When it is dissolved in water, the colour changes to green and then to blue because the following equilibrium exists.

$$CuCl_4^{2-}\,(aq) + 4H_2O\,(l) \rightleftharpoons Cu(H_2O)_4^{2+}\,(aq) + 4Cl^-\,(aq) \qquad (\Delta H < 0)$$

yellow green blue

The following experiments are carried out to show the effect of various changes. **Each experiment starts with a solution that is green in colour.**

First state the **colour change** and then use **Le Chatelier's Principle** to explain the colour change in each of the following.

8.1 Water is added to the solution. (3)

8.2 The solution is placed in a bucket of ice. (3)

8.3.1 Sodium chloride is added to the solution. (3)

8.3.2 What is the phenomenon in 8.3.1 called? (1)

[10]

QUESTION 9

A chemical engineer studies the reaction of nitrogen and oxygen in a laboratory. The reaction reaches equilibrium in a closed container at a certain temperature, T, according to the following balanced equation:

$$N_2\ (g) + O_2\ (g) \rightleftharpoons 2\ NO\ (g)$$

Initially, 2 mol of nitrogen and 2 mol of oxygen are mixed in a 5 dm^3 sealed container. The equilibrium constant (K_c) for the reaction at this temperature is $1{,}2 \times 10^{-4}$.

9.1 Calculate the mass of NO (g) at equilibrium at this temperature. (11)

9.2 How will each of the following changes affect K_c and the yield of NO (g)?

Write down only INCREASE, DECREASE or REMAINS THE SAME.

Change	**Effect on K_c**	**Effect on yield of NO (g)**
The volume of the reaction vessel is decreased at constant temperature.	9.2.1	9.2.2
An inert gas such as argon is added to the mixture (constant temperature).	9.2.3	9.2.4

(4x1)

9.3 It is found that K_c of the reaction increases with an increase in temperature.

Is the forward reaction **exothermic** or **endothermic**? (1)

[16]

QUESTION 10

10.1 Redraw the following energy change graph, and complete it for an exothermic reaction. Label the axes and the graph clearly (show activation energy, activated complex, ΔH, reactants, products).

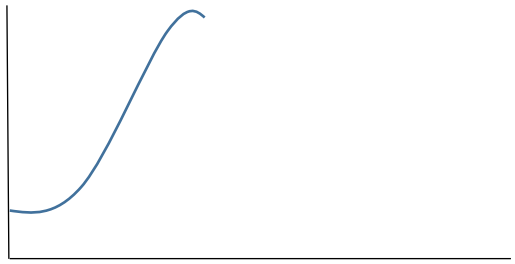

(6)

10.2.1 In another experiment, the energy detail was given as follows:

Energy of the reactants = 25 $kJ.mol^{-1}$
Energy needed to reach the activated complex = 20 $kJ.mol^{-1}$
Energy given off when the products formed 10 $kJ.mol^{-1}$

Now calculate ΔH. (3)

10.2.2 Is this an exo- or endothermic reaction? (1)

10.2.3 Fully explain your answer. (2)

10.2.4 Give ΔH for the reverse reaction. (1)

10.2.5 Give the activation energy of the reverse reaction. (1)

10.3 What could be done to decrease the activation energy of a chemical reaction? (2)

[16]

TOTAL 150 MARKS